Waters Integrity System Applications

Advancements in Particle Beam (PB) Technology Featuring the Waters ThermaBeam ™ LC/MS Interface

Highlights: Waters has improved existing Particle Beam interface technology in order to increase sensitivity and the ability to handle the full range of HPLC conditions. As a result, ThermaBeam, an advanced, patented PB interface featured in the Integrity™ LC/MS System, offers many advantages, including day-to-day ruggedness, over traditional PB interfaces.

The technique of LC/MS offers the analytical chemist a powerful tool combining the compound identification capabilities of single quadrupole mass spectrometry with the separation ability and wide sample analysis range of liquid chromatography. The coupling of a liquid chromatograph to a mass spectrometer has been the subject of much research regarding interface design and dynamics. The difficulties arise when interfacing a liquid flow to the high vacuum and high temperatures of a mass spectrometer ion source. The analyte, which is dissolved in the flowing mobile phase, must be desolvated, vaporized and ionized as it passes through regions of increasing vacuum and temperature. This must also be accomplished with minimal sample loss and degradation.

Electron Ionization (EI) is a desired sample ionization technique because it produces a unique "fingerprint" fragmentation pattern for each analyte. This MS fingerprint can then be used for positive compound identification either by means of library search, comparison to an analytical standard or by interpretation.

The Particle Beam interface, which was developed circa 1984, coupled a wide range of LC separations to an EI mass spec source. The reverse side of this publication discusses the differences between the traditional design of the PB interface and the Waters ThermaBeam interface. In order to discuss some of the improvements in traditional PB technology, it is important to first understand how this interface works. Transfer of neutral analytes from the HPLC to the EI source is accomplished solely by aerodynamic means. There are three steps to this process: aerosol formation (nebulization), desolvation and momentum separation.

Particle Beam Theory

The nebulizer disperses the mobile phase into a fine mist of droplets. The resulting aerosol then passes through a desolvation chamber where the volatile solvent evaporates. The analyte then condenses to form small, solid particles. The resulting particles, solvent and helium carrier are drawn into a pumped chamber causing a rapid expansion. The larger solute particles will gain momentum due to the expansion while the low-momentum solvent and helium will undergo radial expansion. The solute particles will continue through a small orifice in a linear "beam" leaving the lighter components to be pumped away. The high-velocity particle beam will then pass into the EI ion source of the mass spectrometer. The heated walls of the MS source provide thermal energy for flash vaporization followed by electron ionization of the analyte in the gas phase.

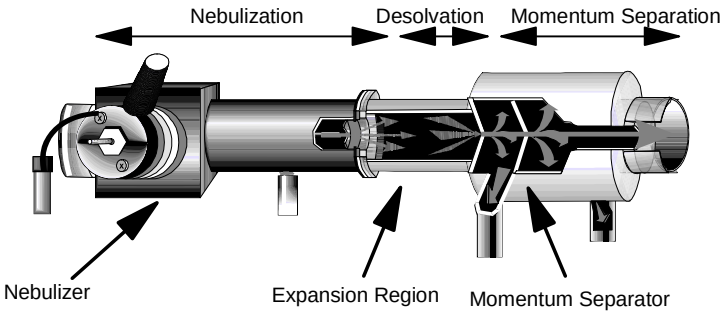

Cut-Away View of One Example of a Particle Beam Interface

Figure 1 at right illustrates a traditional PB interface developed in 1987. This was considered to be an improvement over previous designs developed circa 1984. Following[1] aerosol formation from the HPLC effluent, the aerosol was then desolvated at near atmospheric pressure and *ambient temperature*. A two-stage momentum separator was used to remove solvent vapor and helium from the particle beam. Transport efficiency was poor as indicated by loss mechanism studies that were performed by independent source at the time that this interface was introduced. Note that in this design[2] nebulization occurred at ambient temperature, rather than utilizing any heat in this process. This interface also relied on numerous adjustments, such as the amount of capillary extension beyond the end of the nebulizer tube, in order to optimize performance. Other disadvantages included an inability to handle high LC flow rates and high aqueous mobile phases, and marked differences in performance at extreme ends of an LC gradient.

Traditional Particle Beam Interface

Figure 1

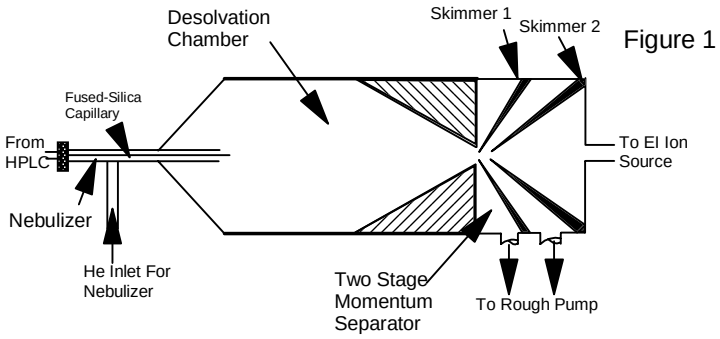

Thermal Concentric Nebulizer

Figure 2

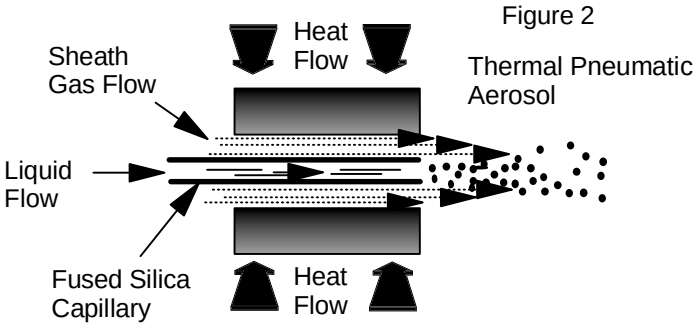

Figure 2 illustrates Waters' unique thermal concentric nebulizer design which uses both heat and concentric sheath gas (helium) for aerosol formation. A flow of helium around the fused-silica capillary transfers heat from the heated nebulizer to the LC flow through the capillary thus creating a very fine aerosol of uniform droplet size. The result is increased transfer efficiency of sample through the interface to the ion source. This design also increases the overall ruggedness of the interface thus requiring less attention by the user. Also, due to improved jet formation, there is a decrease in helium consumption which decreases cost of ownership. Using heat in the nebulization process additionally allows for higher maximum HPLC flow rates due to the greater efficiency of solvent evaporation. The expansion region in the Waters ThermaBeam interface has also been modified in two ways. It is shorter than in older designs thereby reducing the distance required in the expansion region which decreases the dispersion of the PB. This, in turn, results in minimal band broadening and better peak symmetry as well as a much smaller instrument. A bar in the expansion region breaks up large solvent clusters for more efficient, uniform sample transport into the ionizer (patent pending).

ThermaBeam Interface Designed for Maximum Sensitivity

Nebulization	Desolvation	Momentum Separation
Unique thermal/concentric nebulizer generates small, uniform, heated droplets	Preheated droplets require less energy for vaporization Short expansion region decreases dispersion of particle beam	Highly efficient separation of solvent vapor and solute particle Minimal dispersion of the particle beam reduces losses of sample

Waters Nebulizer Assembly

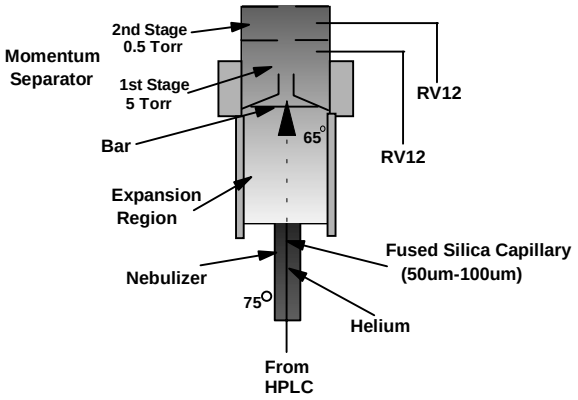

In addition to the increased efficiency and ruggedness, smaller, more compact design, reduction in adjustments of surfaces for different solvent conditions and flow rates, the Waters ThermaBeam Mass Detector utilizes a "no Tools" approach to maintenance. The cleaning process is a simplified two-step process which allows the user to clean and replace the momentum separator and the source ion volume in less than five minutes - all without tools! The improvements that Waters has made in the design of the ThermaBeam LC/MS interface enable the chromatographer to obtain classical EI spectra for his/her LC peak which, in turn, enhances the certainty of data with the positive compound identification .

[1] R.C. Willoughby and R.F. Browner. Anal. Chem., 1984, *56*, 2626-2631.

[2] Browner, R.F., Kirk, J.D., Garrett, D.A. and Perkins, D.D. Presented at the 35th Conference on Mass Spectrometry and Alliedd Topics, 1987, Denver.