© ISA, 1989 Paper #89-0650
0065-2814/89/313-324/$0 + .50pp

901126

AN AT-LINE SAMPLING APPROACH FOR HPLC PROCESS MONITORING

Richard L. Cotter and Jeanne B. Li
Waters ProMonix, Waters Chromatography Division of
Millipore Corporation 34 Maple Street, Milford, MA 01757

ABSTRACT

Uniformity, quality and cost effective manufacturing of products are the main objectives of all production operations. Control of the quality of raw materials and of the manufacturing process are keys to success. One method of controlling these variables is monitoring by high performance liquid chromatography (HPLC). The HPLC technique provides an analytical window into the process by providing the process chemist with a quantitative and qualitative description of the chemical components in the process. This paper will describe some of the benefits of HPLC monitoring and the use of at-line sampling. Some of the benefits and rationale of at-line sampling as a preliminary step to installation of continuous automated on-line HPLC monitor will be detailed.

This paper will use instrumentation which was designed to meet the ever increasing demands of the process chemist[1]. The design criteria were a rugged, reliable and reproducible analyzer which could be run and serviced by personnel who may not be formally trained as chemists.

INTRODUCTION

Uniformity, quality and cost effective manufacturing of products are the main objectives of all production operations[2]. To obtain these objectives, control of the quality of raw materials and of the manufacturing process are essential factors. One method of controlling these variables is monitoring by high performance liquid chromatography (HPLC). The HPLC technique has for many years provided the process chemist with a quantitative and qualitative description of the chemical components in the process. Traditionally grab sampling and laboratory evaluation followed by data feedback to a control location has been employed. An alternative to this approach is the installation of an analyzer in a location which is convenient to or within the process / production area and can be operated and maintained by trained production personnel. This paper will describe some of the benefits of HPLC monitoring and the use of this type of at-line sampling. Some of the benefits and rationale of at-line sampling as a preliminary step to the installation of a continuous automated on-line HPLC monitor will be detailed.

There are several advantages in the use of compositional analysis by HPLC. Both quantitative and qualitative information about the process materials and / or starting materials can be obtained and utilized for control purposes. The amount of product, by-products or impurities present, or the molecular weight information about a polymer can be determined by employing similar analytical techniques to those used for final quality control purposes. The ability to obtain more frequent analyses while reactions are in progress supplies the operator with nearly real time information about the process. The lag time between analyses data points is dependant on the analytical cycle time and sample transport time. The dynamics of each reaction and response time for process changes to impact process performance are variables which must be considered for every process operation. The maximum allowable lag time must be determined prior to establishment of an analytical and sampling procedure to accomodate these variables. The major impact of continuous monitoring is the ability to generate trend information, a summary of the analytical data over time which provides a data base for statistical process control. In most cases frequent analyses and trends provide a means for the detection of transient problems or process upsets. The ability to react and make corrective changes to undesirable changes in the process should impact the quality of the product or the cost associated with the correction of these changes. The continuous monitoring of a process provides a data base to help control the statistically significant parameters which can help to assure product uniformity, quality and cost of manufacture.

HPLC has been commerically available for more than twenty-five years and used in numerous capacities as an analytical tool. Research and development, quality assurance, process monitoring and preparative isolation are some of the more common uses. With the advent of instrumentation that is designed for operation in most environments, this same methodology is starting to be used in more production plants and in pilot process development areas.

INSTRUMENTATION DESIGNED FOR ON-LINE OPERATION

This paper will use instrumentation which was designed to meet the ever increasing demands of the process chemist op.cit.[1]. The design criteria were a rugged, reliable and reproducible analyzer which could be run and serviced by personnel who may not be formally trained as chemists. A diagram of this instrumentation is shown in Figure 1. For ease of operation and maintenance this instrument has two isolated enclosures. The upper enclosure contains the electronics and the microprocessors for control of the pumps, valves and detectors of the HPLC, and for performing the data reduction. The lower enclosure contains the fluidic components of the liquid chromatograph needed for performing the compositional analysis of the process stream. These components are the solvent pump, the injector, dilution or concentration pump, column heater, optics for the detection modules and any valving modules required for specific applications. The enclosures are designed for individual or series purging dependant on installation requirements.

A working knowledge of HPLC is helpful, but not essential to the successful operation of an analyzer in the process area. Most off-line techniques which use laboratory HPLC instrumentation and methods, such as isocratic reverse phase and normal phase liquid chromatography, ion chromatography and gel permeation chromatography of polymers, can be directly transferred to a process HPLC. The difference is principally in the design of the process HPLC analyzer which must operate continuously in the manufacturing environment. The multi-zone temperature control and purging provide operational capabilities with ambient temperature variations from 0 to 110 °F with a relative humidity range from 10 to 100%. With appropriate installation the analyzer can be located in hazardous areas, Class I, Division 1 or 2 areas. Common process conditions such as, exposure to water from condensation or hose down, solvent vapors and vibrations will not affect operations of the analyzer.

Before a decision to install an on-line HPLC analyzer in the manufacturing area can be considered there must be a financial commitment, and the commitment of time and effort of people from many different parts of the plant, including plant managers, process engineers, process chemists, and analytical chemists. The normal steps required for installation of an analyzer are: 1- the compositional monitoring of process streams in an analytical laboratory to determine the feasibility and reliability of the technique, 2- determination of financial impact of the data provided, 3- determination of sampling approach, 4- pilot scale testing and 5- final installation. In many cases the monitoring technique may prove to be a valuable analytical tool in research and quality assurance laboratories, but it does not guaranty success in the more rigorous process environment. Actual testing of the HPLC method in the manufacturing area is desirable to insure the applicability and value of this monitoring technique prior to full scale installation on a process stream.

As was previously mentioned, process samples for many applications have been obtained by grab-sampling followed by laboratory evaluation. This process often requires a long time and in many cases the information becomes available too late to impact the present production run. Recent instrumentation and sampling developments have provided the ability to perform HPLC analytical procedures in the process environment[3]. An at-line sampling system such as shown in Figures 2A and 2B provides the process engineer with a complimentary technique to grab sampling. Samples which are presently sent to the quality or process control laboratory for evaluation can be analyzed by the HPLC analyzer. The process analyzer can be located in the manufacturing environment to provide the convenience of a dedicated analyzer and the rapid availability of analytical results. The at-line sampler also provides a flexible sampling system where samples from a number of different locations in a process can be obtained and analyzed without incurring expensive hook-ups and maintenance of numerous process sampling points. The data lag time now becomes dependant on how frequently various process points are sampled and transported to the analyzer. The data can help establish important return on investment criteria prior to undertaking a permanent installation.

The same logic holds true for pilot production facilities where an at-line sampler and the process analyzer can be used to establish the impact of process changes. For the process development chemist, compositional analysis of the process stream can be an ancillary development tool prior to scaling-up to plant production volumes.

The at-line sampler as shown in Figure 2A consists of a compartment and a sample container. The sample collection container is shown in Figure 2B. The process sample is poured or collected into the stainless steel sample container, the lid is screwed on and placed into the compartment. A pneumatic system activated by closing the compartment door starts the execution of a series of steps. First, the sample container is elevated making the air and fluid connections between the top of the sample container and the top of the compartment. The next step employs the use of air or an inert gas to pressurize the sample container. The pressure drives the sample from the container into the lower compartment of the HPLC analyzer for further sample conditioning, if necessary. The sample within the analyzer can be automatically diluted, concentrated or conditioned by a diluter/concentrator (D/C) pump as shown in the flow diagram in Figure 3, or routed directly to the sample loop of the injection valve. The D/C pump and the injector are flushed with fresh sample immediately prior to each injection to help ensure representative sample acquisition.

For samples which may have a high level of particulates or are highly viscous, a different type of grab sampling device may be required to avoid manual filtration. A system such as the one shown in Figure 4 has proven very useful in a number of applications where filtration is very difficult. In this approach the sample is collected in a disposable container and pumped with a peristaltic pump across a tangential filtration module. The flow rate and the differential pressure can be adjusted to meet the requirements of the process sample. Samples which are too viscous to filter can be diluted prior to recirculating through the filtration loop.

CHROMATOGRAPHIC EVALUATIONS

The following examples are used to demonstrate the versatility of these sampling approaches.

The analysis of many polymers can be difficult due to sampling requirements. Many polymeric samples can be difficult to obtain by direct on-line sampling techniques because of viscosity, reactor temperatures and pressures, and limited solubilities in some cases. In order to provide a sample which can be handled by the analyzer some manual sample preparation may be required, such as cooling or partial dilution by solvent addition to help reduce viscosity. The addition of an appropriate solvent to the sample prior to use of the at-line sampler may be required to prevent possible solidification and plugging of the analyzer fluidic lines. After this precaution is taken the sample can be directly fed into the analyzer and additional sample preparation automatically performed within the lower enclosure. Once the sample is in a state which can be provided to the analyzer, gel permeation chromatography, GPC, can provide important molecular weight distribution data by use of standard mathematical data reduction routines. Physical characteristics such as molecular number average (Mn) and molecular weight average (Mw) can be determined and correlations of these values for good and bad products can be established[4]. Typically the analytical reproducibility of the ProMonix analyzer is ± 1% for the average molecular weight and ± 2% for the number average for process material[5]. The ability to monitor for small changes in the polymers' molecular weight characteristics can have a major impact on the performance of that product.

The example shown in Figure 5 is an example of samples collected from a polymerization in process. The lower distribution was a sample collected in the early stages of the reaction, and the upper trace as the reaction has proceeded towards completion. The shifts in molecular weight can be quickly monitored by viewing a trend line and the reaction quenched when desired molecular weight is obtained.

Another example of the usefulness of at-line analysis is in fermentation monitoring for the determination of small inorganic and organic molecules by ion-exchange chromatography. In the following example, the distances between sampling points made it financially impractical to install a sampling system which could route the sample to the analyzer. The samples in this example were collected and manually transported to the analyzer for analysis. A tangential filtration module as described above was used to filter the fermentation broth. The desired components in this application were the nutrients, the sugars, and the desired product. These samples can be monitored as in Figure 6 to rapidly determine all of the desired components. The three traces shown in this figure are the standards in the lower chromatogram, the starting reaction mixture on the top trace, and the reaction at completion in the middle trace. The trend line for this fermentation can be used to quickly determine whether the nutrient level is sufficient to maintain product production, and to determine when the product production has reached the optimum level. An example of the trend data for this fermentation is shown in Figure 7. The upper trend (Figure 7A) shows the decrease of the nutrients as a function of time, and the lower trace (Figure 7B) shows the increase in product level. This trend line can be used to quickly determine whether the process stream has changed, visually (from the general distribution of the data points) and numerically (the numerical value of the data point, time and date collected are shown at the cursor). Acceptable upper and lower limits or the acceptable range for components of interest can be preset by the process engineer. Values outside these limits can be used to trigger alarms, alerting the operators to a critical change in the chemical composition of the process.

SUMMARY AND CONCLUSIONS

The use of at-line sampling approachs and HPLC process analyzers can provide very versatile monitoring tools. The use of the analyzer and the at-line samplers as described can rapidly provide data to the process chemist without leaving the process area. Valuable economic information for determining the worth of monitoring a particular process in the plant environment can be established. As an R&D tool in the pilot plant, important return on investment and the payback period for the analyzer can be established. In addition, process modifications to help increase yield, reduce scrap and facilities costs and improve product uniformity may be obtained.

We feel that following an at-line approach should provide representative process data. One of the end results will be a more complete understanding of the benefits of on-line HPLC monitoring for a particular process. Once the benefits are established, the optimal location and sample conditioning requirements for the analyzer can be determined. At-line sampling provides a good first step and perhaps a complete alternative to a continuous on-line monitoring installation. In most cases an analyzer can be converted to continuous on-line sampling, if desired. To accomplish this the analyzer can be equipped with an automated sample conditioning system. Both approaches, at-line and on-line, are viable alternatives. Once the performance is established the process chemist can determine which choice makes the most sense for his particular application.

REFERENCES

1. R.L. Cotter: "The use of high performance liquid chromatography in process monitoring", Journal of Analysis and Purification 2(1), 28-35 (1987).
2. Fundamentals of In-Process Analysis for Process Control. Training and Professional Development Text Rochester Institute of Technology 1988.
3. R.L Cotter, C. Dĕluski, J.B. Li, and R.J. Limpert,: "At-line sampling as an optimum determinant of the point(s) for on-line monitoring", Technical proceedings of 1989 Pittsburgh Conference, Technical presentation #1638.
4. Know More About Your Polymer. Technical Brochure B40/82326, Waters Chromatography Division of Millipore Corporation, May 1986.
5. R.L. Cotter, R.J. Limpert, and C. Deluski: "Rapid and reliable polymer analysis by on-line LC", American Laboratory 19 (12), 54-62 (1987).

APPENDIX

Figure Legends

FIGURE 1: A diagram showing the basic components of a Waters ProMonix On-Line HPLC Analyzer. The upper compartment door contains a keypad for programming and operation of the analyzer and a viewing window. The window allows viewing of indicator lights and a liquid crystal display which provides an operator - analyzer interface. The LCD display permits viewing of programmed parameters, instrument status, chromatographic results, alarm messages, etc. The lower chamber contains the pumps, valves, injector and detector(s) required for the chromatographic separation. The mobile phase for the analysis can be located in this compartment, or supplied from a source external to the analyzer.

FIGURE 2A: At-Line Sampler. The exterior view of the sampler is shown in the upper part of the figure and the interior view in the lower part. Steam or hot water can be used to heat the chamber. Air or inert gas is required to operate the pneumatic ram to elevate the sample container and to pressurize the sample container and to drive the sample to the ProMonix analyzer. The switches are activated when the compartment door is closed.

FIGURE 2B: At-Line Sample Container. The sample container is constructed of stainless steel. The top is removed by unscrewing it from the container. A Teflon sample outlet tube is connected to the top of the container. When compressed air is introduced into the sample container, the sample is forced up the outlet tube to the the ProMonix analyzer. The container will hold about 100 ml of sample.

FIGURE 3: Flow diagram of sample in lower enclosure. Flow diagram for additional sample preparation which can be performed automatically within the lower enclosure of the HPLC analyzer. Sample is introduced from a sample select point external to the analyzer and into the sample valve(s) of the diluter / concentrator pump. Sample is then conditioned and sent to the injector valve.

FIGURE 4 Grab sampling system diagram. This diagram shows athe basic components, recirculating pump, filter module, standard / calibration cylinder, and valving for grab sampling applications.

FIGURE 5 Polymer sample comparisons. The chromatographic comparisons shown are of the molecular weight distributions of a polymerization in process. The lower trace was taken early in the reaction process and the upper trace was taken near reaction completion. The visual comparison clearly shows the increase in molecular weight by utilization of chromatographic overlays.

FIGURE 6 Overlay comparisons of samples taken from a fermentation process and standards. In this comparison the lower trace is a standard analysis of the sugars and final product expected to be present during a fermentation. The upper trace was taken at the start of the fermentation - no final product is present. The middle chromatogram, which was taken at the completion of the fermentation shows a high level of product and minimal amounts of the starting sugars.

FIGURE 7A: Fermentation Trend Plot. The concentration of the total sugar levels in a fermentation process indicated as peak 11 is shown for a three day period The operator settable maximum and minimum acceptable limits,100.00 and 0.00 grams / liter are indicated on the top and bottom of the left axis, respectively. The 50 g/L line indicates the calibration standard value. The date, time and actual concentration at the cursor (the star) is given in the upper right. The middle of the right axis documents the analyzer number (1), the process stream number (1), the peak number (11) a total sugars peak and the detector channel number (1). The two dates at the bottom of the figure are the dates of the first and last data points displayed. The cursor can be moved backwards and forwards to show up to seventy five data points.

FIGURE 7B Fermentation Trend Plot. This trend shows the corresponding increase of desired fermentation product. As in Figure 7A the amount of product present at any point in time can be accessed by the operator. Trend limits for this component are set independantly of the other measured components.

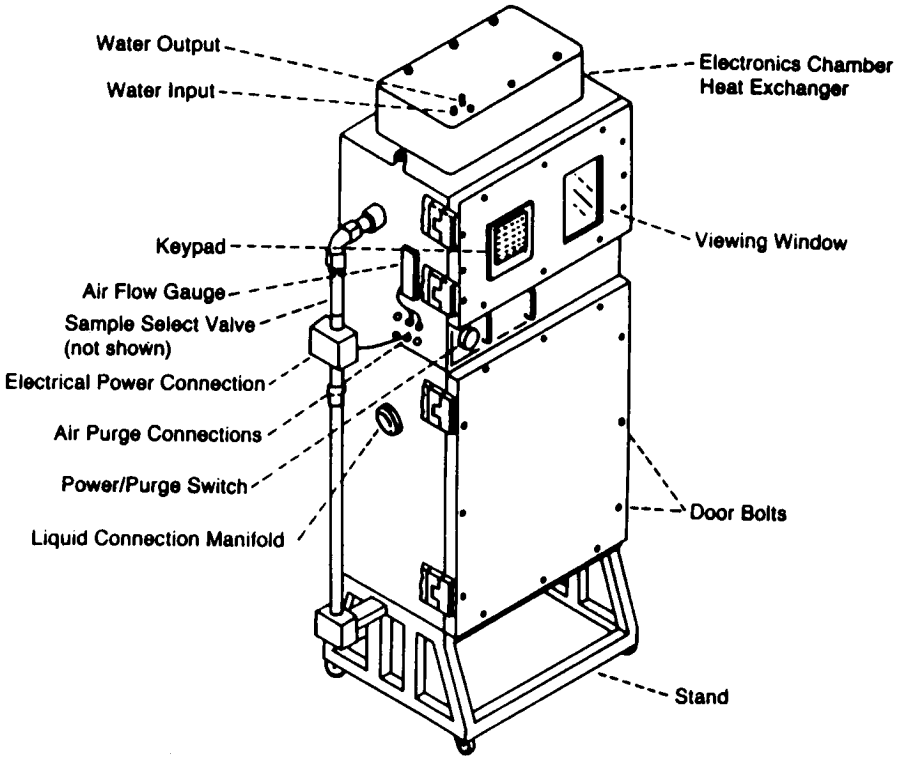

FIGURE 1

HPLC PROCESS ANALYZER

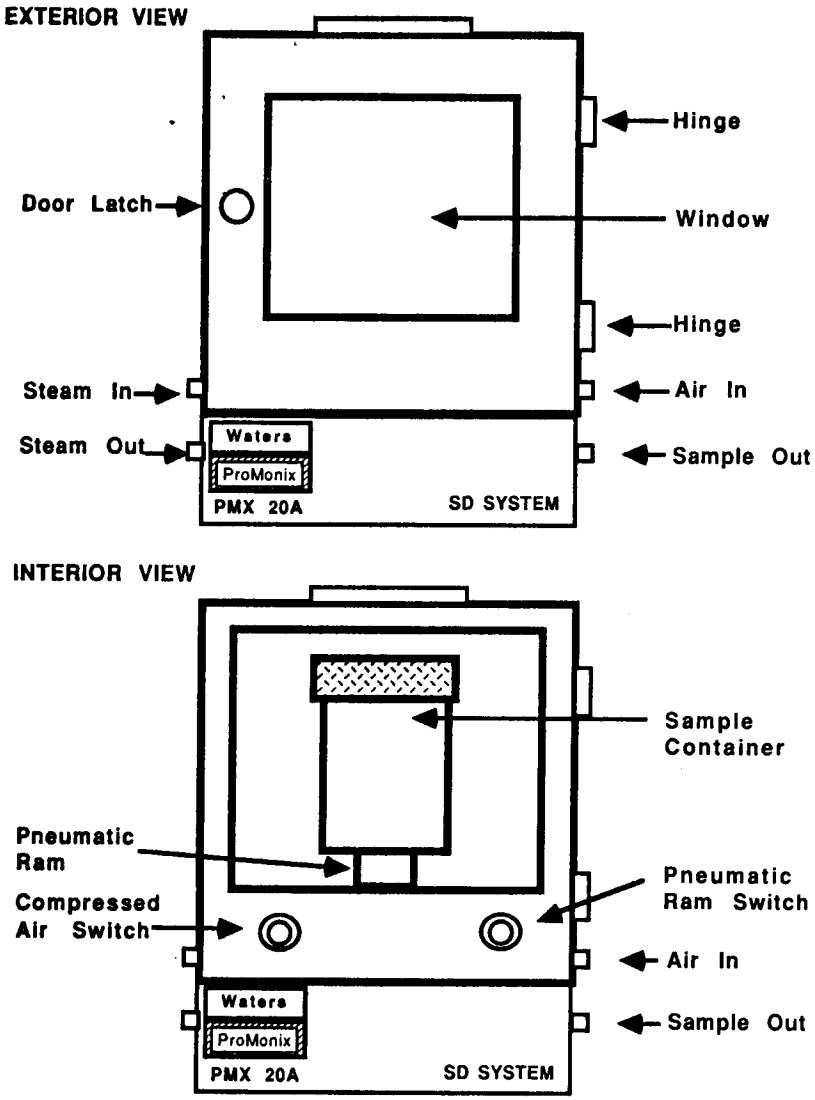

FIGURE 2A

AT-LINE SAMPLER ENCLOSURE

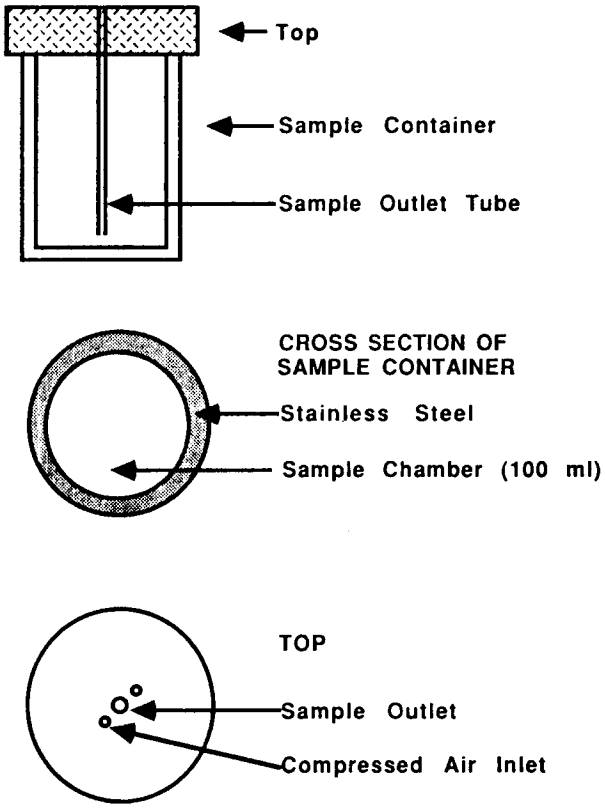

FIGURE 2B

SAMPLE COLLECTION CONTAINER FOR AT-LINE SAMPLER

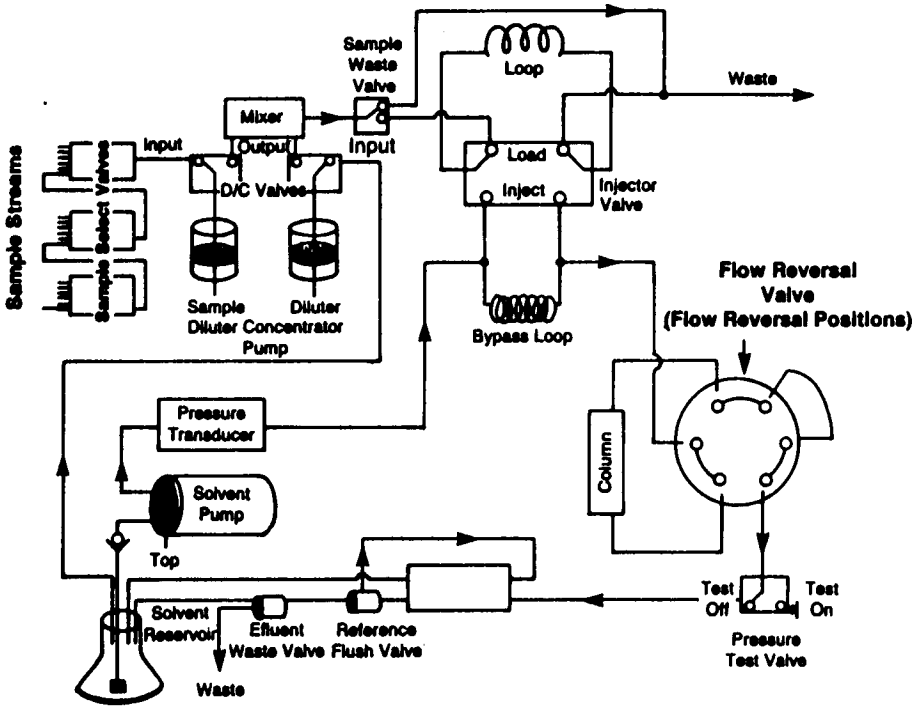

FIGURE 3

FLOW DIAGRAM OF SAMPLE

IN LOWER ENCLOSURE

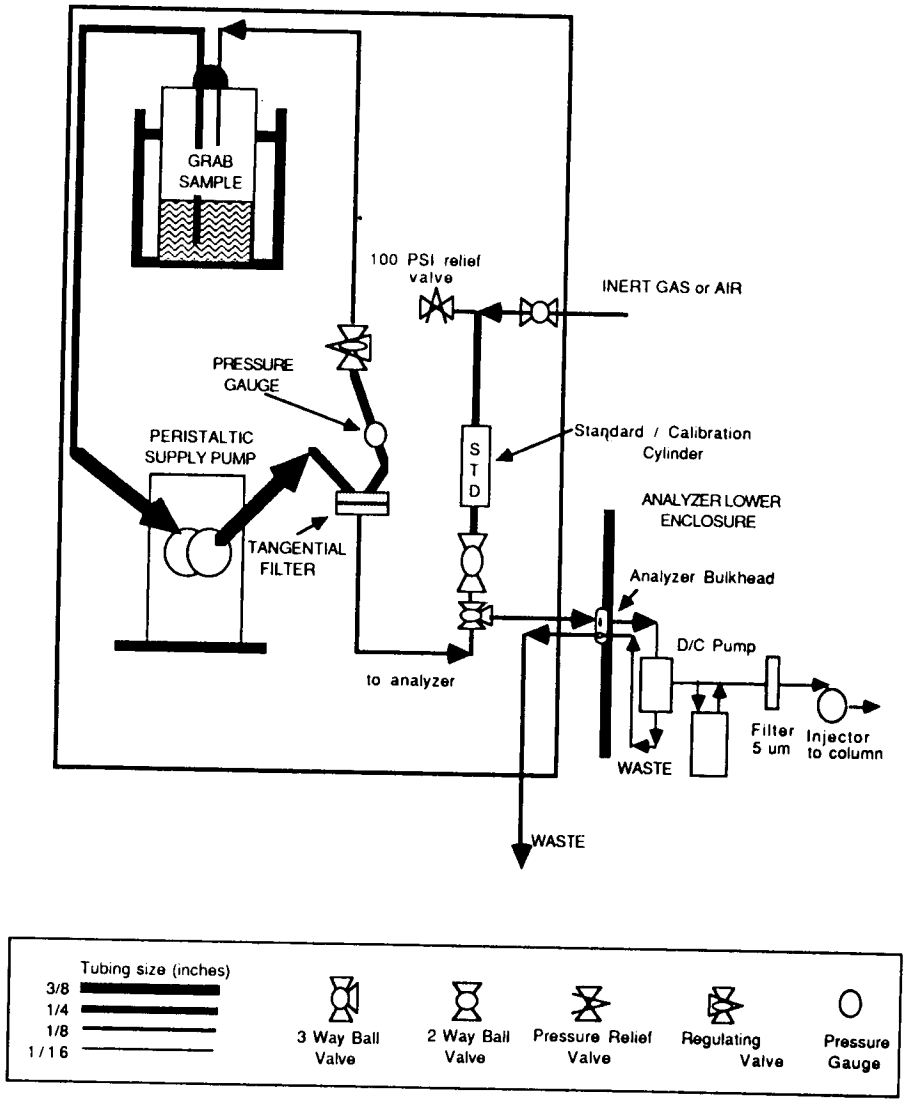

FIGURE 4

GRAB SAMPLING SYSTEM

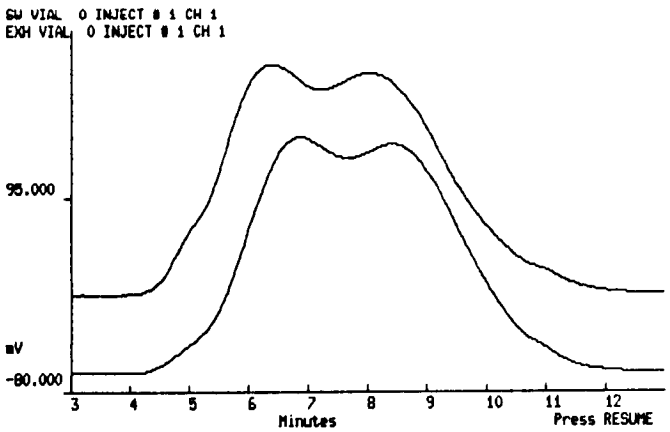

FIGURE 5

OVERLAY COMPARISONS OF A

POLYMERIZATION IN PROGRESS

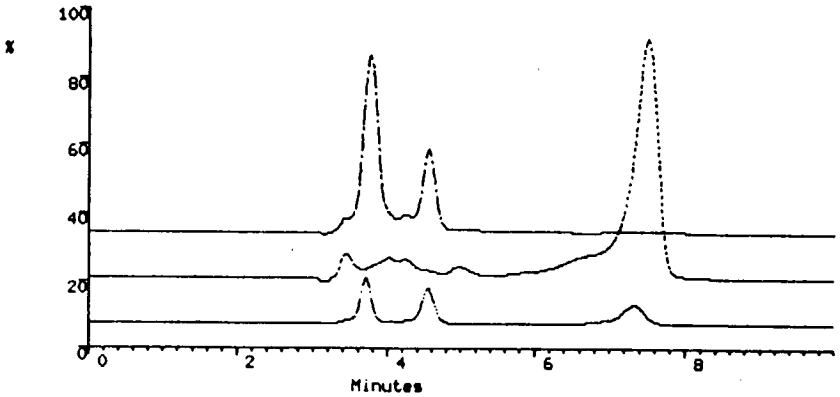

FIGURE 6

OVERLAY COMPARISONS OF

FERMENTATION IN PROGRESS

Figure 7A

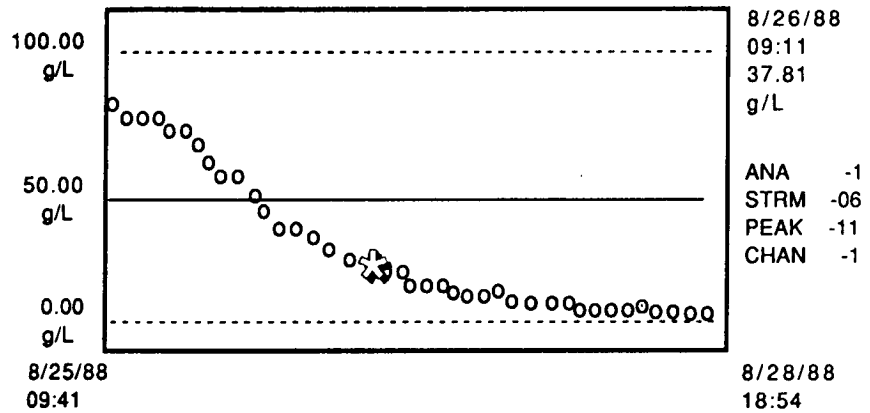

Figure 7B

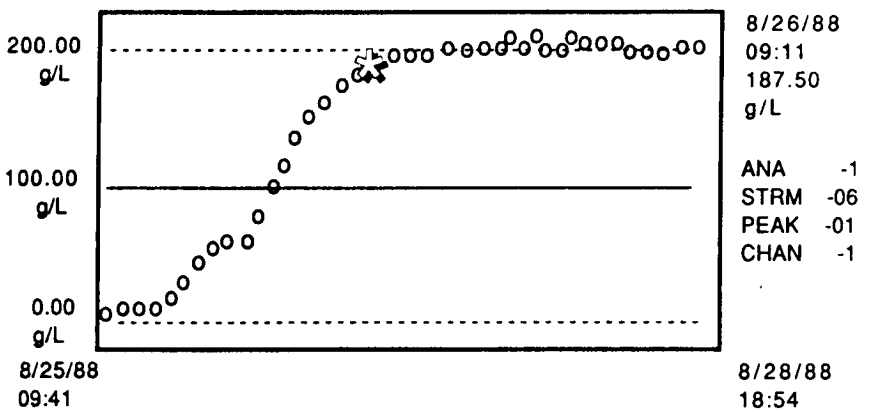

FIGURE 7

FERMENTATION TREND PLOTS

©ISA, 1989 - Paper #89-0451
0065-2814/89/325-330/$0 + .50pp

CONTINUOUS COMPOSITION MEASUREMENTS WITH A NEW PROCESS PHOTOMETER

THOMAS M. CARDIS
MANAGER OF APPLICATIONS DEVELOPMENT
COMBUSTION ENGINEERING, PROCESS ANALYTICS
843 NORTH JEFFERSON STREET
LEWISBURG, WEST VIRGINIA 24901

ABSTRACT

On-line photometers provide continuous monitoring of key components in a process stream. The purpose of this paper is to present several applications which show improved performance with the use of a microprocessor controlled process photometer. Photometric quantitative analyses in the ultraviolet (UV), near infrared (NIR) and fundamental infrared regions can be achieved with this photometer.

The analyzer discussed in this paper is a multi-channel, fixed wavelength filter photometer. These photometers have established a reputation for stability and reliability in process control applications.

"Key words: Ultraviolet spectroscopy, infrared spectroscopy, process analyzers"

INTRODUCTION

Non-dispersive, fixed wavelength IR and UV photometers have been widely used for the composition monitoring of process streams. An excellent review on process photometers, has been presented in a text by Paul E. Mix. [1] Most of these analyzers are dual wavelength photometers that utilize reference and measure wavelength, narrow bandpass optical filters. A new multi-channel fixed filter photometer has been developed by Combustion Engineering, Process Analytics. The new photometer features the use of a microprocessor to control the operation of the analyzer. The microprocessor also provides data handling calculations. Difficult photometer applications with interfering components in the stream are feasible with the new photometer. A matrix algebra algorithm is used to compensate for interfering components.

The following outline will be used for this presentation:

I. Continuous Composition Measurements With a New Process Photometer

- A. Introduction
- B. Principle of Operation
- C. Design Features
- D. Applications Discussion
- E. Conclusions

PRINCIPLE OF OPERATION

A single beam, multi-channel fixed filter design is used in the new photometer. The use of multiple filters allows for compensation of interfering components in the analysis. A reference wavelength is usually selected where none of the components in the stream absorb radiation. The measure filter is selected where the component of interest absorbs light. Several other measure filters can be used to measure interfering components in the stream. The electronics of the analyzer perform an analog to digital conversion of the signals from the optical filters. The microprocessor applies response factors from the matrix algorithm to the signals from the filters. The concentration of the measured components is read directly on the liquid crystal display of the controller. A 4-20 mA. output is provided in order to communicate measurement results to a process control computer.