TechnicalNOTE

Waters

LCT PREMIER: ENHANCED MS RESOLUTION

Waters Corporation, MS Technologies Centre, Manchester, UK

Introduction

The Waters® LCT Premier™ Mass Spectrometer is the highest performance benchtop orthogonal acceleration time-of-flight (oa-TOF) LC/MS system available today. Its innovative design incorporates a TOF analyser that has the capability of switching between two preset modes of resolution operation at the simple click of a button: V transmission providing >5000 Full Width Half Maximum resolution (FWHM) (Figure 1) and W transmission providing >10,000 FWHM resolution (Figure 2). Figure 3 shows how FWHM resolution is calculated.

TOF mass spectrometry, with its elevated resolution, provides the user with the ability to perform exact mass measurements to within 3 ppm of the actual mass. This allows enhanced specificity of the analytical answer and therefore a higher confidence that the answer is correct.

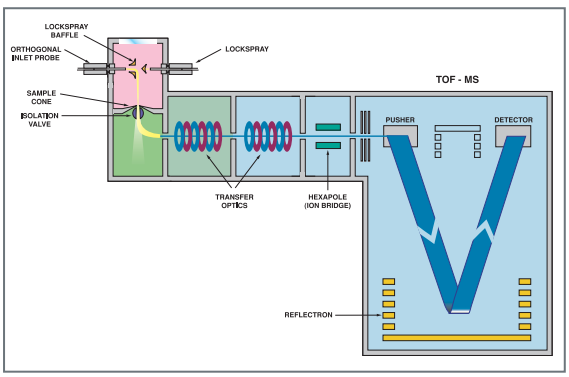

Figure 1. LCT Premier Mass Spectrometer's V transmission.

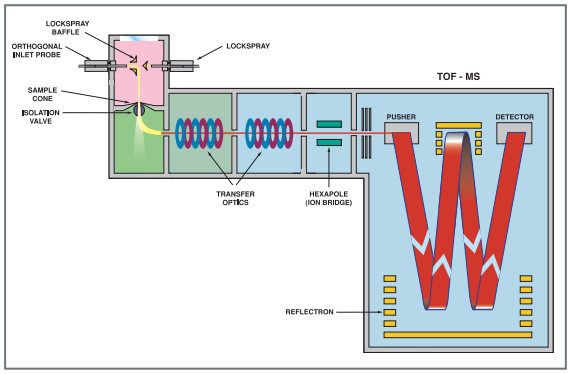

Figure 2. LCT Premier Mass Spectrometer's W transmission.

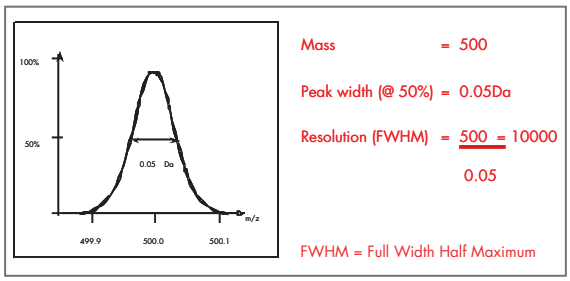

Figure 3. Example of resolution calculation for oa-TOF.

Figure 4 shows the typical resolution provided by the LCT Premier in both V and W mode transmission and compares the resolution to that of a typical scanning quadrupole or ion trap style instrument. Due to the narrow spectral peaks provided by the LCT Premier, isobaric interferences can be distinguished easily but also provide the ability to accurately determine the peak's center. Because the accuracy of determining the center of the spectral peak is enhanced, an exact mass measurement to within 3 ppm of actual can be determined with a high degree of confidence. All this can be done during an LC/MS experiment, providing the user with a highly specific answer.

Figure 5 clearly shows the benefit of enhanced resolution provided by the LCT Premier. In this example, a scanning quadrupole instrument and LCT Premier have been used to analyse the same sample. With the quadrupole instrument a single molecular ion is produced at a nominal mass of m/z 215. However, with the LCT Premier with mass resolution of 10,000 FWHM, two distinct ions can be seen—one due to the component of interest and one due to a contaminant ion at the same nominal mass. With the resolving power of LCT Premier, an exact mass measurement for both ions is possible whereas with the quadrupole instrument, the two components would not be detected. Such selectivity obtained with the LCT Premier provides greater confidence in the analytical result.

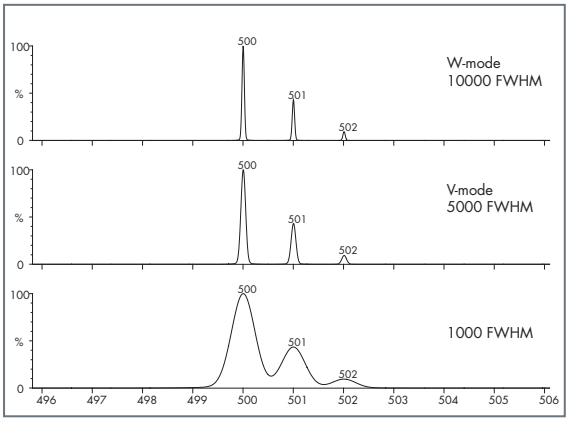

Figure 4. Comparison of V and W mode resolution on the LCT Premier with typical scanning quadrupole/ion trap resolution.

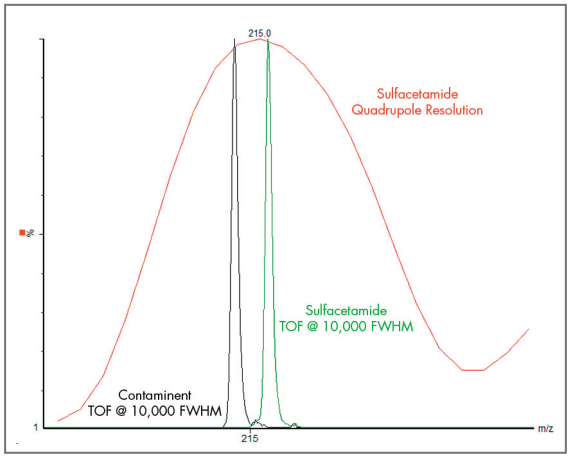

Figure 5. Benefits of oa-TOF against quadrupole resolution.

Figure 6 shows the mass spectrum of the $[M+4H]^{4+}$ isotope pattern of mellitin acquired in both V and W-mode optics. This typical resolution was calculated at 6,200 FWHM in V-mode and 11,400 FWHM in W-mode.

Figure 7 shows the mass spectra of the singly charged molecular ion of leucine enkephalin ($[M+H]^{+}$ = 556.2771) acquired in both V and W mode optics. By measuring the width at half height, the resolution was calculated at 5,500 FWHM for V-mode and 11,000 FWHM for W-mode.

In addition to the improved TOF analyser in the LCT Premier that provides enhanced resolution, ions are detected and recorded using a 4 GHz time-to-digital converter (TDC). This technology provides unsurpassed peak definition even at low mass (<500 m/z), particularly when compared to other TOF detection devices such as an analogue-to-digital converter (ADC). When analysing ions below m/z 1,000 with an ADC, there is a significant reduction in peak definition due to the number of points physically acquired across such low mass ions.

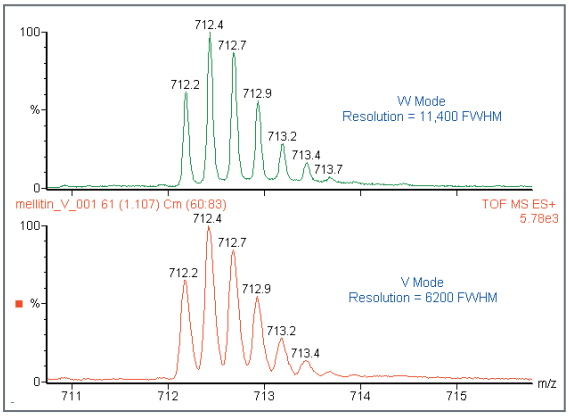

Figure 6. V and W-mode mass spectra of $[M+4H]^{4+}$ isotope pattern of Mellitin.

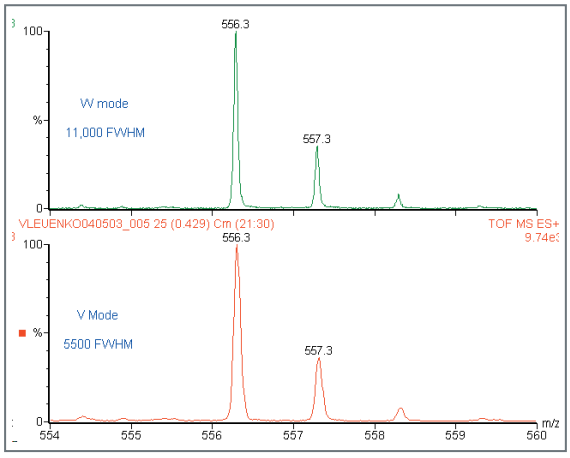

Figure 7. V and W-mode mass spectra of Leucine Enkephalin.

With a TDC, there is negligible drop off in resolution definition even down to low m/z values. Figures 8a-8e show singly charged $[M+H]^+$ ions of some small pharmaceutical type molecules, from m/z 556 to m/z 152, where resolution is maintained with the use of a TDC.

The LCT Premier: for enhanced resolution with superior peak definition that results in unsurpassed specificity and exact mass measurement.

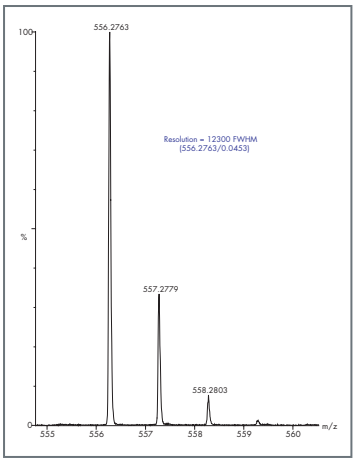

Figure 8a. Resolution measurement at m/z 556.

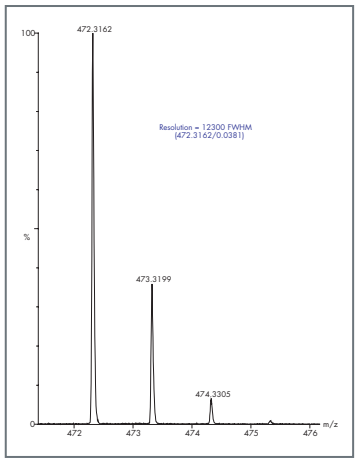

Figure 8b. Resolution measurement at m/z 472.

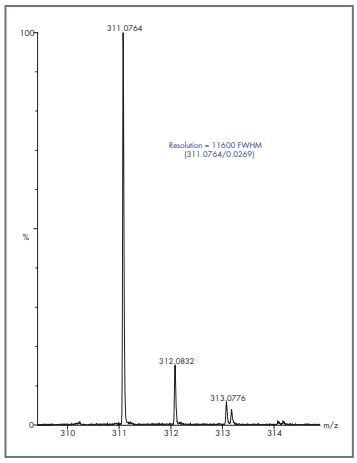

Figure 8c. Resolution measurement at m/z 311.

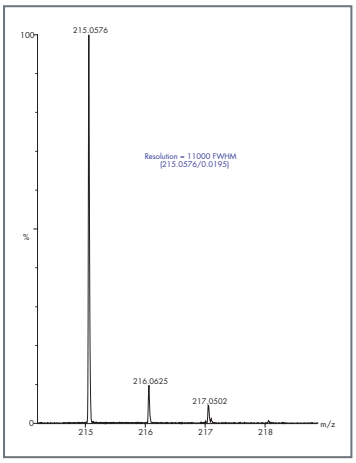

Figure 8d. Resolution measurement at m/z 215.

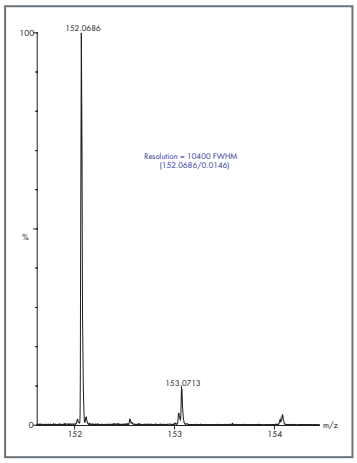

Figure 8e. Resolution measurement at m/z 152.

TechnicalNOTE

Waters

Sales Offices:

AUSTRIA 43 1 877 18 07
AUSTRALIA 61 2 9933 1777
BELGIUM AND LUXEMBOURG 32 2 726 1000
BRAZIL 55 11 5543 7788
CANADA 800 252 4752 X2205
CZECH REPUBLIC 420 2 617 11384
DENMARK 45 46 59 8080
FINLAND 358 9 506 4140
FRANCE 33 1 3048 7200
GERMANY 49 6196 400600
HONG KONG 852 29 64 1800
HUNGARY 36 1 350 5086
INDIA 91 80 2837 1900
IRELAND 353 1 448 1500
ITALY 39 02 27 4211
JAPAN 81 3 3471 7191
KOREA 82 2 820 2700
MEXICO 52 55 5524 7636
THE NETHERLANDS 31 76 508 7200
NORWAY 47 6 384 6050
PEOPLE'S REPUBLIC OF CHINA 86 10 8451 8918
POLAND 48 22 833 4400
PUERTO RICO 787 747 8445
RUSSIA/CIS 7 095 931 9193
SINGAPORE 65 6278 7997
SPAIN 34 93 600 9300
SWEDEN 46 8 555 11 500
SWITZERLAND 41 62 889 2030
TAIWAN 886 2 2543 1898
UK 44 208 238 6100
US 800 252 4752

Waters

WATERS CORPORATION
34 Maple St.
Milford, MA 01757 U.S.A.
T: 508 478 2000
F: 508 872 1990
www.waters.com

For Complete Confidence

Waters and LCT Premier are trademarks of Waters Corporation.
All other trademarks are the property of their respective owners.
©2004 Waters Corporation Produced in the U.S.A. September 2004 720000932EN LL-PDF

LLOYD'S REGISTER QUALITY ASSURANCE · ISO9001
UKAS QUALITY MANAGEMENT 001
IQNet IT