PosterREPRINT

Waters

A NOVEL METHOD FOR HTS SCREENING FOR PHASE II CONJUGATIONS FOR *IN VIVO* SAMPLES WITH AN ORTHOGONAL QUADRUPOLE TIME OF FLIGHT MASS SPECTROMETER USING NEUTRAL LOSS WITH EXACT MASS

G Harland[1], J Castro-Perez[1], I Beattie[2], K Joncour[2]
[1]Waters Corporation, Atlas Park, Simonsway, Manchester, M22 5PP, UK.
[2]AstraZeneca, R&D Charnwood, Bakewell Road,Loughborough, Leics. LE11 5RH UK.

Introduction

During the drug discovery stages, screening and identification of *in-vitro* metabolites plays an important role, but remains very challenging due to the different complexity of structures being analyzed. LC/MS/MS is now a well-established technique and it plays a vital role in this early phase of Drug Discovery. With new advances in MS technology, and especially Q-Tof™ technology and its exact mass capabilities, good accurate data will be ensured, which is very important for metabolite identification. By the use of exact mass data, and determination of metabolite structures it will allow medicinal chemists to make the necessary 'structural tuning' to achieve the desired compound activity. Moreover, as the demand to screen a large number of compounds in Drug Discovery increases, it is imperative to have information about Phase I and II reactions in one single experiment. In turn, this will facilitate compound selection for the next stage of drug development. Moreover, it will also provide a better predictive platform when the compound goes *in-vivo*. Incubation levels are also important since we want to have a reasonable concentration which may represent the levels seen *in vivo*. For this work we have developed a new approach to the detection of Phase II conjugations in which we can monitor Phase II conjugations such as glucuronides and so forth from a single LC run (Figure 1). To do this, conjugation moieties form a characteristic loss when analyzed by LC/MS/MS. This neutral loss can be monitored with great accuracy using exact mass. From this single injection the mass spectrometer applies two collision energies one at a lower level and one at a higher level (Figure 2, 3 and 4). This will also allow detection of Phase I metabolites in the low level collision energy. If a loss of a conjugation such as glucuronide with an exact mass of m/z 176.0321 ±20 mDa is detected then the instrument will automatically switch to carry out MS/MS and confirm the loss. Otherwise, it continues switching between the two collision energy modes. In this paper, we will show the analytical strategy utilized to detect putative Phase II reactions based on the exact neutral loss data from a bile sample containing Midazolam and Fluanisone (Figure 5).

Methods

Samples

Sample:	Test compound Midazolam and Fluanisone
Metabolizing System:	*In vivo* rat bile sample
Dilution Factor:	Sample diluted in water 1/10

LC conditions

Solvent Delivery System:	Waters® 2795 Separations Module
Mobile Phase A:	Water +0.2 % Formic Acid
Mobile Phase B:	MeCN + 0.2 % Formic Acid

Gradient:

Time	A%	B%	C%	D%	Flow	Curve
0.00	98.0	2.0	0.0	0.0	0.15	1
1.50	98.0	2.0	0.0	0.0	0.15	1
15.00	30.0	70.0	0.0	0.0	0.15	6
17.00	5.0	95.0	0.0	0.0	0.15	6
19.00	5.0	95.0	0.0	0.0	0.15	6
19.10	98.0	2.0	0.0	0.0	0.15	6
25.00	98.0	2.0	0.0	0.0	0.15	6

Flow Rate:	150 µL/min
Column:	Waters Atlantis™ dC_{18} 150 x 2.1 mm id 3.5µ
Injection Volume:	10 µL

Mass Spec Conditions

Mass Spectrometer:	Waters Micromass® Q-Tof micro™ with LockSpray™
Ionization mode:	ESI + ion mode

Acquisition:	Centroid
Capillary Voltage:	2.8 kV
Cone Voltage:	25 V
Collision Energy Profile:	20 and 45 eV
Source Temperature:	100 °C
Desolvation Temperature:	250 °C
Lock Mass: M+H	Leucine Enkephalin, @ 556.2771 1ng/µL concentration

Results

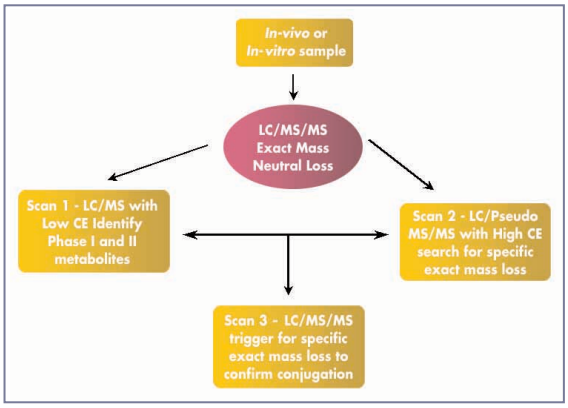

Figure 1. Neutral loss with a single injection.

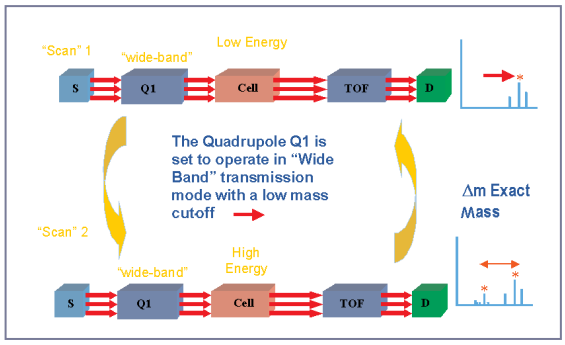

Figure 2. Exact mass neutral loss on a Q-Tof.

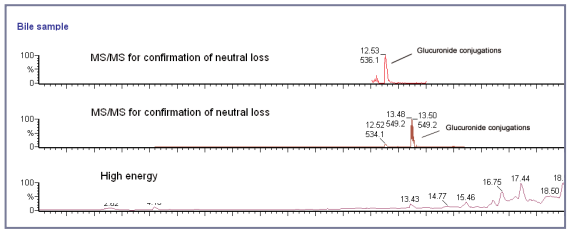

Figure 3. Exact mass neutral loss for bile sample.

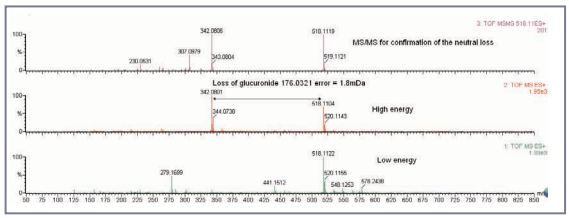

Figure 4. Sequence of steps for exact mass neutral loss.

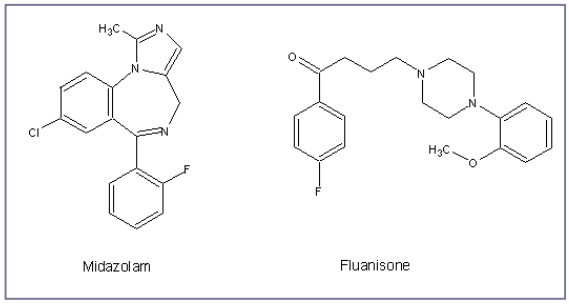

Figure 5. Chemical structures for Midazolam and Fluanisone.

- All major glucuronide metabolites were detected by using this approach and also other Phase I metabolites were detected. The overall mass accuracy for all detected xenobiotics was better than 2.1 ppm RMS (Table 1).

PosterREPRINT

Waters

Compound name	m/z observed	m/z theoretical	mDa +/-	ppm +/-
Midazolam				
M+16	342.0801	342.0809	0.8	2.5
M+32	358.0759	358.0756	0.3	0.7
M+34	360.0915	360.0909	0.6	1.7
M+192	518.1130	518.1117	1.3	2.6
M+208	534.1079	534.1068	1.1	2.1
Fluanisone				
M+16	373.1927	373.1920	0.7	2.0
M-14	343.1822	343.1809	1.3	3.7
M+192	549.2248	549.2233	1.5	2.8
			Average mDa	RMS ppm
			0.9	2.1

Table 1. Mass accuracies for Midazolam and Fluanisone metabolites.

- In addition to the detection and confirmation of the glucuronide conjugations, we were also able to detect Phase I metabolites from the low CE energy scan from the two-dosed compounds (Figure 6).

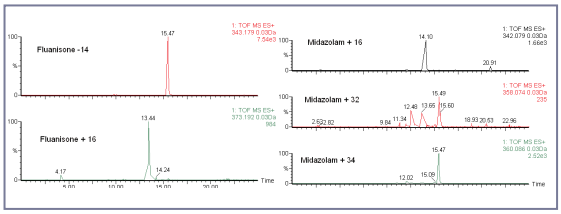

Figure 6. XIC for Phase I metabolites using exact mass DDA™ mode.

Conclusions

- This is a highly selective and sensitive method for screening of specific conjugations by exact mass
- By this approach information from Phase I and other Phase II conjugations are also kept because the data is acquired in full scan exact mass
- With this approach there are no limitations to the number of exact mass neutral loss acquisitions which may be carried out on a single scan because the experiments are based upon DDA

WATERS CORPORATION
34 Maple St.
Milford, MA 01757 U.S.A.
T: 508 478 2000
F: 508 872 1990
www.waters.com

Waters

MICROMASS MS TECHNOLOGIES

Opt-In! My Profile www.waters.com

LLOYD'S REGISTER QUALITY ASSURANCE ISO9001

UKAS QUALITY MANAGEMENT 001

IQNet