PosterREPRINT

Waters

CHARGE STATE SEPARATION BY LINKED SCANNING A MASS FILTER WITH MOBILITY SEPARATOR

John Hoyes, Jason Wildgoose, Kevin Giles and Steven Pringle: Waters Corporation, Manchester, UK.

Presented at ASMS, Montréal, Canada, 8th-12th June 2003

OVERVIEW

Aim

To improve the detection limit of multiply charged ions through selective rejection of background ions

Method

An RF-only ion guide has been operated with an axial field to facilitate separation of different ion species according to their mobility

Synchronized scanning of a quadrupole mass filter in conjunction with this mobility device enables ion charge state selection for a given m/z and provides efficient rejection of background ions

Results

More than an order of magnitude improvement in detection limits of multiply charged ions have been achieved using this approach

INTRODUCTION

Often in the field of proteomics the limiting factor for the identification of proteins is not the inability to generate adequate MS/MS data but the inability to recognize peptide precursor ions in the mass spectrum. A large proportion of the peptide products from a tryptic digest of proteins has two or more charges and this fact is commonly used as a means of recognizing such ions. However, at low levels these peptides may be obscured by more intense singly charged chemical background ions. Hence a means of separating these multiply charged ions from the singly charged background of nominally the same m/z would be invaluable.

Separation of ions according to their mobility offers a means of differentiating between ion species and, in combination with mass spectrometry, can be a powerful orthogonal separation technique. Previous groups have coupled conventional DC-only drift tubes to different types of mass spectrometer (1), however these suffer from poor transmission due to diffusion losses with typical efficiencies being as low as 0.2%.

A device in common usage on electrospray mass spectrometers is the RF-only ion guide which provides radial confinement of ions and, with the combination of an axial field, can provide mobility separation of ions without the diffusion loss associated with the DC-only drift tubes.

Presented here is the coupling of such a device with a quadrupole mass filter in a novel "linked scan" technique which enables charge state differentiation of ion species with nominally similar m/z values to provide efficient background removal and improve limits of detection.

The majority of the data presented here were produced using a continual DC gradient along the ion guide, as in DC-only drift tubes, however a new approach using a travelling voltage wave which continually propagates axially along the device is also presented.

EXPERIMENTAL METHOD 1

Ion Mobility Separation and Linked Quadrupole Scanning

The instrument used in these experiments is a modified Waters® Micromass® Q-Tof Ultima™ and is shown schematically in Figure 1. Ions are first trapped in an RF-only ion guide and then injected into the mobility device at regular intervals (~10 ms) by pulsing the gate electrode. The mobility device is based on a stacked-ring RF-only ion guide which is segmented axially allowing the application of a voltage gradient to produce an axial field. This axial field 'drags' ions through the gas in the device with the ion transit time being dependent on its mobility, those of higher mobility traversing the device in a shorter time. The trap and the mobility device operate at ~2 mbar, following these there is another stage of differential pumping prior to the quadrupole. In this lower pressure region there is a further segmented ion guide with axial field to maintain the separated ion packets. To build up a temporal profile of a

particular ion exiting the mobility device the quadrupole was switched from transmitting to rejecting the m/z of interest at various time delays, T_{off}, after the release of the trapped ions. The timings for this technique may also be seen in Figure 1.

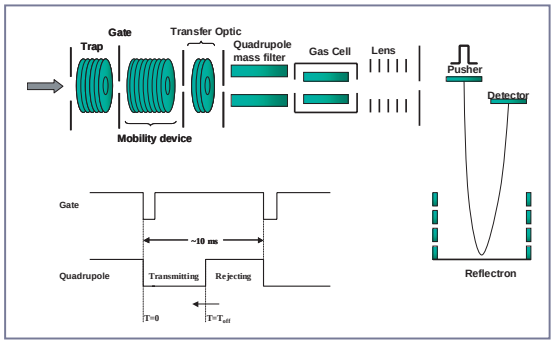

Figure 1: Schematic and timings diagram of the system used for mobility measurements.

To evaluate the separation capability of the mobility device, Gramicidin-s and Leucine Enkephalin were chosen since they produce electrospray ions of similar m/z but are doubly and singly charged respectively. A mixture of 0.1ng/µL gramicidin-s ($[M+2H]^{2+}$ = 571.36) and leucine enkephalin ($[M+H]^{1+}$ = 556.28) was infused. The potential drop across the mobility device was 100 V giving an axial field of ~ 6.70 V/cm. The gate electrode was pulsed low every 10 ms for a duration of 0.2 ms. Importantly, no losses were observed in ion intensity between the trapping and non-trapping configurations indicating 100% duty cycle of the trap/mobility device.

The quadrupole 'transmitting' state was achieved by operating in RF-only mode with a set mass of 400 amu and the 'rejecting' state with a set mass of 1500 amu, the quadrupole low mass cutoff being used to prevent transmission. The quadrupole was initially set to transmit both ions all the time by setting T_{off} equal to 10 ms.. T_{off} was then reduced from 10 ms to 0 ms in 0.1 ms steps, the ions being acquired at the ToF detector. Figure 2 shows the temporal separation achieved with this mobility device. It is clear from this plot that the doubly charged gramicidin-s has a higher mobility than the singly charged leucine enkephalin. Figure 3 is a differentiated version of Figure 2 giving an indication of the mobility peak shape and resolution.

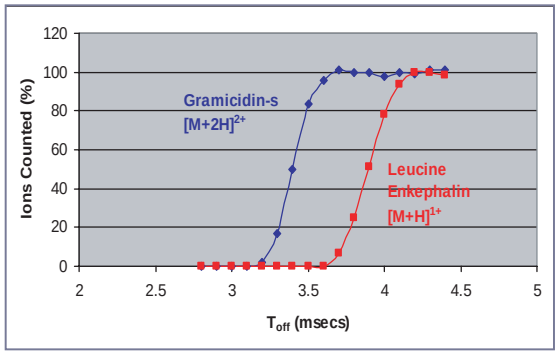

Figure 2: Ion transmission following mobility separation for doubly and singly charged ions of similar m/z as a function of time after pulse release (T_{off}).

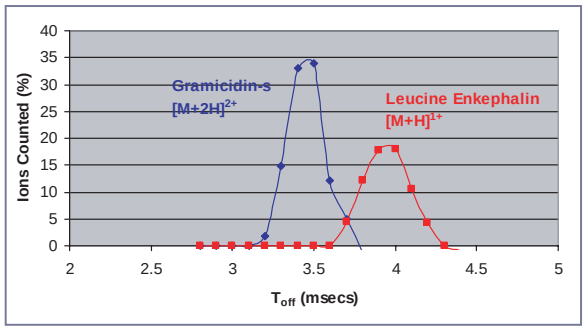

Figure 3: Differentiated data showing mobility peak shape for doubly and singly charged ions of similar m/z.

The FWHM achieved with the mobility separation device is ~ 10 for the singly charged leucine enkephalin and ~ 12 for the doubly charged gramicidin-s.

The mobility separation of a variety of ions with different charge states but similar m/z has been shown before and has been evaluated on the present instrument. The data obtained from an infusion of a Phosphorylase-b tryptic digest are shown in Figure 4. The drift times (T_{off}) were determined from the peak tops of data presented in the form of Figure 3.

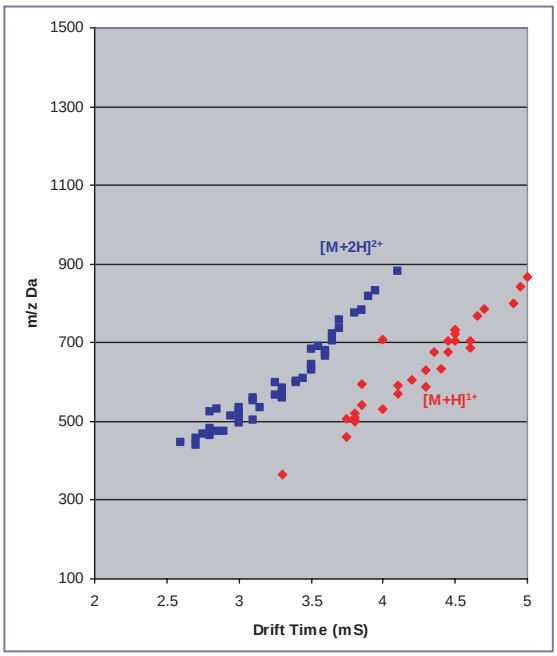

Figure 4: Scatter diagram showing the relationship between drift time (T_{off}) and m/z for doubly and singly charged ions.

Figure 4 shows that there is a systematic difference in the drift times for singly and doubly charged ions at a given m/z, doubly charged ions having a higher mobility and therefore a shorter drift time. This behavior is also observed for higher charge state ions of a given m/z. This difference in drift time may be used to separate the multiply charged ions from the singly charged by sweeping the quadrupole RF with time such that the low mass m/z cutoff lies between the doubly and singly charged scatter plots. This concept is graphically displayed in Figure 5, if the low m/z cut off is scanned along the black arrow then the higher charge states would be transmitted and the singly charged ions would be lost to the quadrupole rods. The timing diagram for this technique is shown in Figure 6.

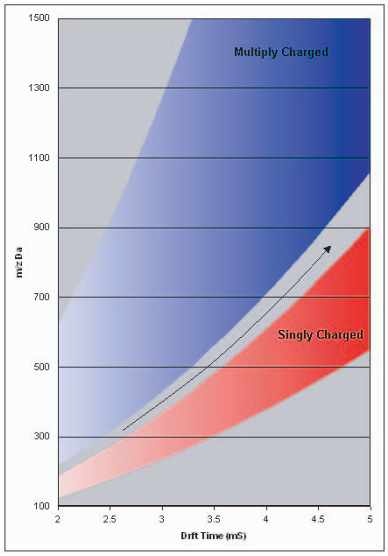

Figure 5: Schematic showing concept of low m/z cutoff scan for singly charged ion removal.

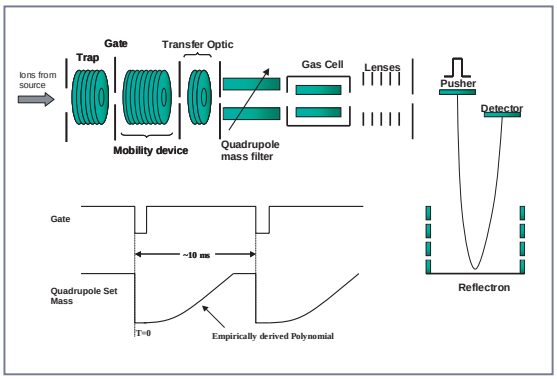

Figure 6: Schematic and timings diagram of the system used for scanning low mass cutoff.

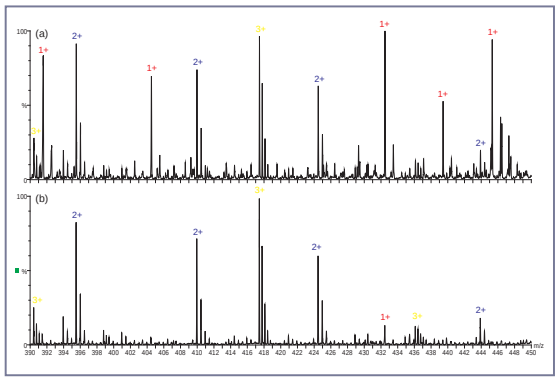

Figure 7: Spectra showing singly charged background removal.

The quadrupole set mass as a function of drift time (the 'linked scan') was determined empirically from data such as those shown in Figure 4.

Results 1

To illustrate the beneficial effect of the mobility separation with the quadrupole linked-scan operating, a BSA digest was infused, the spectra obtained are shown in Figure 7. Figure 7(a) was acquired without the mobility separation/linked scanning and Figure 7(b) with mobility separation/linked scanning. Figure 7(b) shows the efficient removal of the vast majority of singly charged background ions whilst having little effect on the multiply charged analyte ions.

The effect on detection limits were also investigated, Figure 8 shows the spectra obtained for 0.1 fmol consumption of ß-lactoglobulin without the mobility separation/linked scanning 8(a) and with the mobility separation/linked scanning 8(b). The triply charged ion around m/z 770 shows more than an order of magnitude improvement in the detection limit.

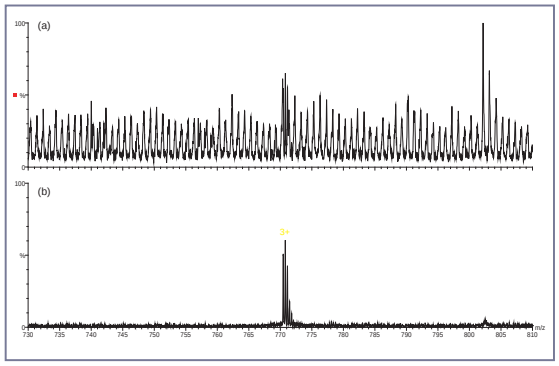

Figure 8: Spectra showing over an order of magnitude improvement in detection limit.

The separation between multiply charged and singly charged ions shown in Figure 5 can in fact be sub divided further with the multiply charged band being split into doubly, triply and quadruply charged bands etc, as represented in Figure 9. Consequently, instead of using just the RF-only low m/z cutoff as previously mentioned, transmission of a given charge state should be possible whilst attenuating all others by using both a low and high m/z cut off scan. The high mass cutoff can be achieved by applying some resolving DC to the

quadrupole during scanning. The low m/z cutoff and high m/z cutoff scan lines for doubly charged ion selection are shown in Figure 9.

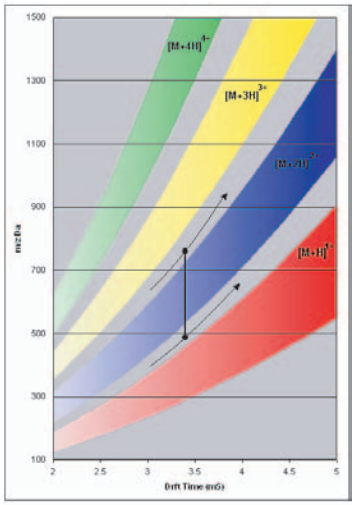

Figure 9: Schematic showing concept of low m/z and high m/z cutoff scan for specific charge state selection.

To illustrate this 'band-pass' transmission ß-lactoglobulin was infused and the high m/z cutoff and low m/z cutoff were set to transmit doubly charged ions. This was achieved by running the quadrupole with the resolving DC set to 90% of the value required for unit mass resolution. The low m/z cutoff was then set to follow the previously determined curve. Figure 10 shows the results of operating without the mobility/linked scan approach, 10(a), and with the mobility/linked scan approach using both a high m/z cutoff and a low m/z cutoff,10(b). The data shown in Figure 10 shows preferential transmission of doubly charged ions compared with the other charge states, significantly improving the spectral quality. In Figure 11 the m/z 820 - 835 window from Figure 10 has been expanded and shows the extremely efficient suppression of a quadruply charged ion allowing detection of a doubly charged ion that would otherwise have been missed.

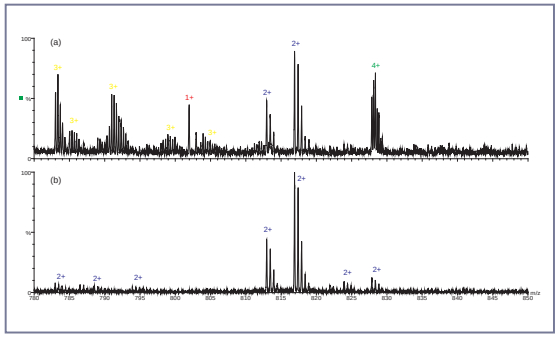

Figure 10: Spectra showing doubly charged ion selection.

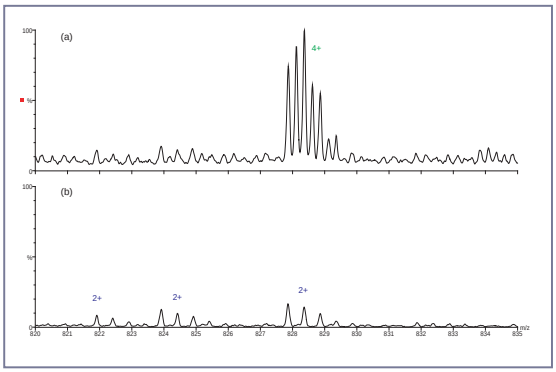

Figure 11. Expanded spectra showing doubly charged ion selection.

EXPERIMENTAL METHOD 2

Mobility Separation using a Travelling Wave

The results shown previously use a continual axial field to achieve the required mobility separation. An alternative approach to separating ions according to their mobility has been investigated

here which involves use of a stacked ring RF-only ion guide with an axial travelling wave to propel ions. In this device, the travelling wave controls the axial velocity of ions and, with appropriate selection of wave velocity, pulse height and gas pressure it is possible to impart mobility dependent drift velocities onto the ions. Thus, in combination with pulsed delivery of ions into the device, temporal separation of ions according to their mobility can be achieved. The travelling wave device used comprised 122 ring electrodes arranged in groups of 9 elements, this allows a repeating pulse pattern to propagate continuously along the length of the cell. A schematic of the system is shown in Figure 12, where the travelling wave device has replaced the standard collision cell of a Waters Micromass Quattro Ultima™ tandem quadrupole mass spectrometer.

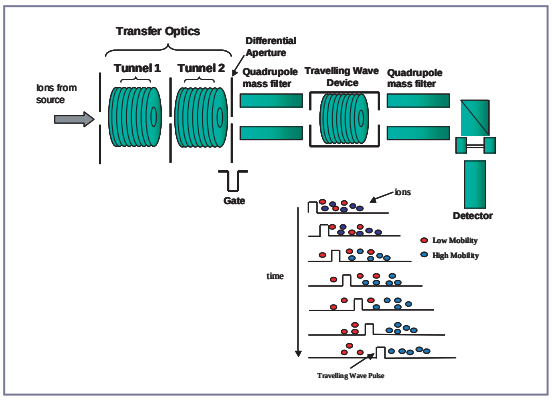

Figure 12: Schematic diagram of the system used for travelling wave experiments.

To investigate the mobility separation capabilities of the travelling wave device a mixture of leucine enkephalin and gramicidin-S was continuously infused into the instrument. The ions were trapped in tunnel 2 (an RF-only stacked ring ion guide at ~10^{-3} mbar) by applying +5V to the differential aperture. Ion packets were released by pulsing the differential aperture voltage low every 11 ms for a duration of 26 µs.

The ions then passed though MS1 quadrupole mass filter, operated in RF-only mode, and entered the travelling wave device. The travelling wave voltage pulse (1.6V) was applied to each stacked ring electrode for 5 µs in sequence, corresponding to a travelling wave velocity of ~300 ms^{-1}. An Argon pressure of ~1.6×10^{-2} mbar was maintained in the device. Ions leaving the device were then mass selected using MS2. The detector head amplifier output was recorded using a digital storage oscilloscope triggered from the trapping voltage.

RESULTS 2

The singly charged species from leucine enkephalin produced a response that was temporally shifted by approximately 1 ms from that of the doubly charged gramicidin-s. The oscilloscope traces are shown in Figure 13.

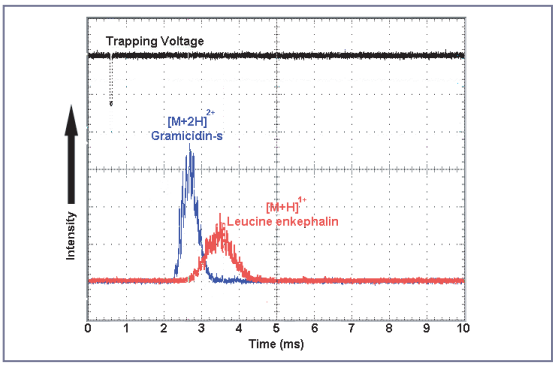

Figure 13. Oscilloscope traces of gramicidin-s and leucine enkephalin showing the temporal separation due to their different mobilities.

PosterREPRINT

Waters

CONCLUSION

It has been shown that, through use of RF-only ion guides, efficient mobility separation can be achieved at intermediate pressure commonly associated with electrospray mass spectrometers. Furthermore, this mobility separation can be utilized as part of novel 'linked scan' technique to improve the detection limits of multiply charged ions in a singly charged background by over an order of magnitude. The mobility/linked scan technique has also been shown to be beneficial in selecting a particular charge state from a multiply charged background.

Whilst the majority of this work was undertaken using a DC voltage gradient to drive the ions axially, a novel approach using a travelling wave has also been shown and merits further investigation to fully characterize its performance capabilities.

REFERENCES

1) C.S. Hoaglund-Hyzer, Y.J. Lee, A.E. Counterman and D.E. Clemmer. Anal. Chem. 2002, 74, 992-1006

To whom all correspondence should be addressed:

e-mail: Jason_Wildgoose@waters.com

WATERS CORPORATION
34 Maple St.
Milford, MA 01757 U.S.A.
T: 508 478 2000
F: 508 872 1990
www.waters.com

Waters

MICROMASS MS TECHNOLOGIES

Opt-In! My Profile www.waters.com

LLOYD'S REGISTER QUALITY ASSURANCE ISO9001

UKAS QUALITY MANAGEMENT 001

IT